VNJAR

Packaging for your brand.

Materials, formats and print.
From production to applications.







Anhui Weinuojia
New Material Packaging Co., Ltd.

Company documents

VNJAR

Business licence · Printing business permit



统一社会信用代码
91340881MA8QH4C05J（1-1）

营业执照
（副本）

名　　称　安徽维诺嘉新材料包装有限公司
类　　型　其他有限责任公司
法定代表人　王利
经营范围　一般项目：化工产品销售（不含许可类化工产品）；技术进出口；货物进出口；进出口代理；塑料制品制造；塑料制品销售；纸制品制造；纸制品销售；家用纺织制成品制造；针纺织品销售；日用口罩（非医用）生产；日用口罩（非医用）销售；特种劳动防护用品生产；技术服务、技术开发、技术咨询、技术交流、技术转让、技术推广；企业管理咨询；塑料加工专用设备制造；非金属矿物制品制造；物业管理；停车场服务；非居住房地产租赁；会议及展览服务（出国办展须经相关部门审批）（除许可业务外，可自主依法经营法律法规非禁止或限制的项目）
许可项目：食品用纸包装、容器制品生产；食品用塑料包装容器工具制品生产；包装装潢印刷品印刷（依法须经批准的项目，经相关部门批准后方可开展经营活动，具体经营项目以相关部门批准文件或许可证件为准）

注册资本　伍仟万圆整
成立日期　2023年05月29日
住　　所　安徽省安庆市桐城市经济技术开发区双新产业园伊洛大道66号

登记机关　安庆市市场监督管理局
2026 04月 10日

国家企业信用信息公示系统网址：http://www.gsxt.gov.cn　市场主体应当于每年1月1日至6月30日通过国家企业信用信息公示系统报送公示年度报告　国家市场监督管理总局监制

印刷经营许可证

2025（企业编号）印证字第 346060946 号
3406112

企业名称　安徽维诺嘉新材料包装有限公司　经营场所　安徽省安庆市桐城市经济技术开发区双新产业园伊洛大道 66 号
法定代表人（负责人）王利　企业类型　其他有限责任公司
经营范围　包装装潢印刷品

发证机关（盖章）
有效期限至　2030 年 06 月 30 日　2025 年 12 月 15 日

国家新闻出版署监制

Original documents reproduced unchanged.

Production documents

VNJAR

Industrial production licence and product schedule

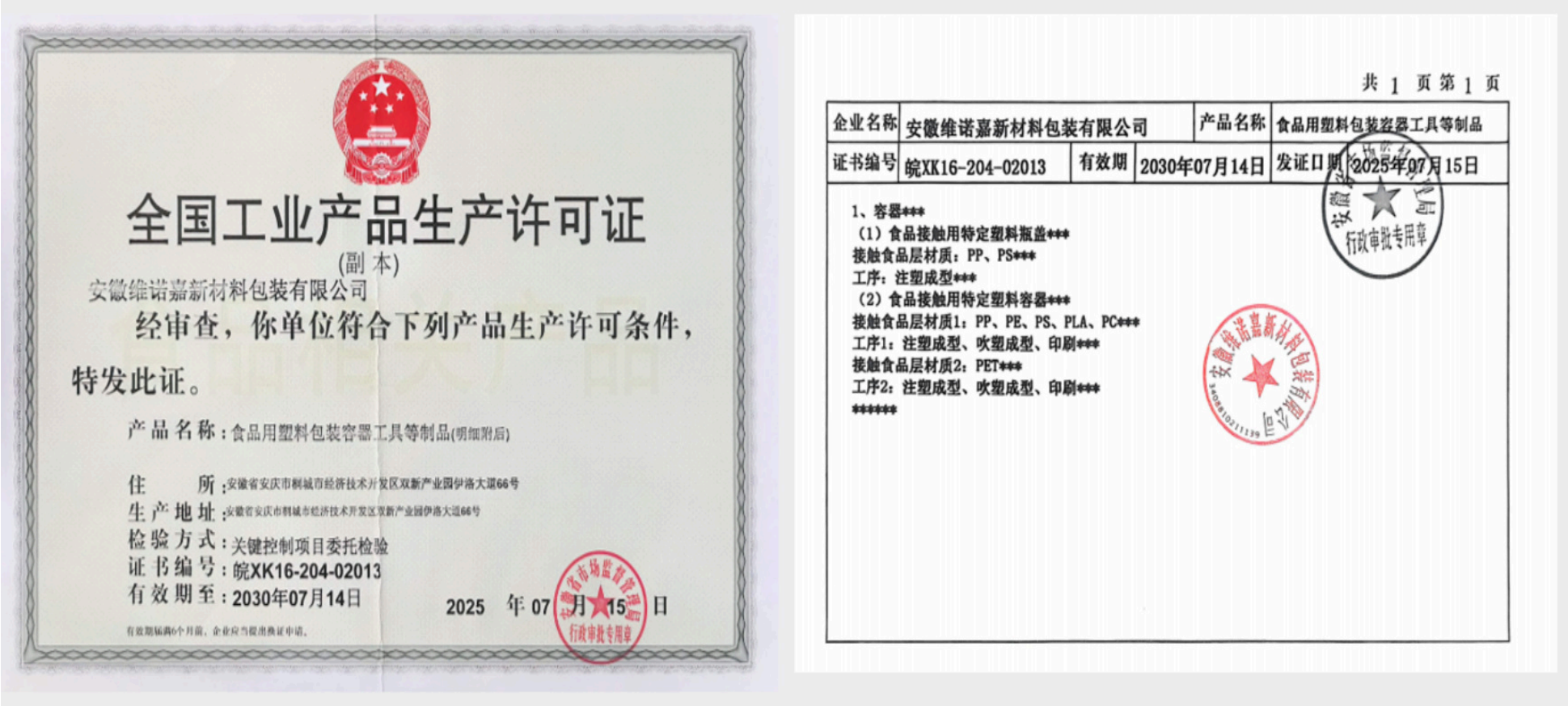

全国工业产品生产许可证

(副本)

安徽维诺嘉新材料包装有限公司

经审查，你单位符合下列产品生产许可条件，特发此证。

产品名称：食品用塑料包装容器工具等制品(明细附后)

住　　所：安徽省安庆市桐城市经济技术开发区双新产业园伊洛大道66号

生产地址：安徽省安庆市桐城市经济技术开发区双新产业园伊洛大道66号

检验方式：关键控制项目委托检验

证书编号：皖XK16-204-02013

有效期至：2030年07月14日

2025 年 07 月 15 日

有效期届满6个月前，企业应当提出换证申请。

安徽省市场监督管理局 行政审批专用章

共 1 页 第 1 页

企业名称	安徽维诺嘉新材料包装有限公司		产品名称	食品用塑料包装容器工具等制品
证书编号	皖XK16-204-02013	有效期	2030年07月14日	发证日期 2025年07月15日

1、容器***
（1）食品接触用特定塑料瓶盖***
接触食品层材质：PP、PS***
工序：注塑成型***
（2）食品接触用特定塑料容器***
接触食品层材质1：PP、PE、PS、PLA、PC***
工序1：注塑成型、吹塑成型、印刷***
接触食品层材质2：PET***
工序2：注塑成型、吹塑成型、印刷***
******

安徽省市场监督管理局 行政审批专用章

安徽维诺嘉新材料包装有限公司

Original documents reproduced unchanged.

Management and testing documents

Quality, environment, occupational health and testing documents



Original documents reproduced unchanged.

Team









Quality management

VNJAR

Material inspection and control

Production process control

Production environment control

Quality management system





VNJAR

From material to finished bag

01 Company profile 08

02 Nonwoven fabric 12

03 Laminated nonwoven 16

04 Products & construction 22

05 Applications 33

01

Company profile

Design, production and quality



Company introduction



Design, development, production and sales

Anhui Weinuojia designs, develops, manufactures and sells nonwoven bags. The catalogue records decades of industry experience and an integrated line for slitting, cross-cutting, bag making, sewing, screen printing, gravure printing and ultrasonic handle welding.

The Anhui site lists 3 fabric-production machines, 4 high-speed presses, 3 laminators and 17 bag-making machines, with a stated capacity of 30 million bags per month. The Chengdu branch serves Southwest China with 1 laminator and 6 bag-making machines, with a stated capacity of 12 million bags per month.

The company describes ongoing equipment and process improvements, supported by product inspections and quality assurance.

Service process

VNJAR

01

Design

Packaging design informed by market needs and product positioning.

02

Development

Practical, convenient products developed around their intended use.

03

Production

Manufacturing supported by production equipment, process controls and inspection.

04

Sales

The source catalogue describes sales across more than 20 provinces and relationships with over 100 regular distributors.

Equipment and storage

Production equipment

Specialised equipment and an integrated line for materials and bag making.

Warehouse storage

The catalogue lists more than 5,000 m² of storage, organised by category.

Raw material storage

Materials stocked for production needs, with entry and storage controls.









02

Nonwoven fabric

Material structure, production and properties









Production and quality

Experienced production team

Teams study and improve processes, with clear requirements for product quality.

Organised workflow

From design, plate-making and orders to production, inspection, packing and storage.

Quality inspection

Inspection instruments, material-entry standards, finished-product checks and sampling.









About non-woven fabric



Nonwoven fabric is made directly from polymer chips, staple fibres or continuous filaments. Fibres form a web through air flow or mechanical processes; the web is bonded by hydroentanglement, needle punching or hot rolling, then finished without weaving.
This soft, breathable, flat-structured material offers strength, durability and a cotton-like feel. It produces little fibre lint and can also be used as reinforcement. Compared with woven cotton, nonwoven material is easier to form into bags and costs less.

Material features

Lightweight

Made mainly from polypropylene resin, with a specific gravity of 0.9—three-fifths that of cotton. Bulky, with a pleasant handle.

Soft

Fine fibres (2–3D) are bonded by light thermal points, producing a moderately soft, comfortable material.

Resilient

Moderate stiffness allows the material to recover its shape quickly and resist deformation.

Water-repellent & breathable

Polypropylene does not absorb water. The porous fibre structure supports air flow and helps the fabric stay dry and easy to wash.

03

Laminated nonwoven

Lamination and everyday applications



Lamination overview



Laminated nonwoven fabric is made using a casting process. The layers bond firmly without added adhesive during lamination. The source describes a soft handle, without a plastic feel or skin irritation. Bags made from this material are called laminated nonwoven bags.
The original catalogue describes nonwoven fabric as moisture-resistant, breathable, flexible, lightweight, flame-retardant, readily degradable, non-toxic and non-irritating, with a wide colour range and potential for reuse. It states that the material can naturally decompose outdoors in 90 days and last indoors for up to five years, and describes combustion as producing no toxicity, odour or residue. These are descriptions from the original brochure.



Reuse and cost

Compared with plastic bags, nonwoven bags offer easy pattern printing and vivid colour expression. They can be used repeatedly, with lower wear losses than plastic or paper bags. Reuse can reduce costs while providing ongoing advertising exposure.



Durability and carrying

Traditional plastic and paper shopping bags are often made thinner to reduce costs and may tear more easily. Increasing their strength adds cost. Nonwoven shopping bags are tough and resist wear. Laminated versions also offer water resistance, a pleasant feel and an attractive appearance.



Branding and print

An attractive nonwoven shopping bag can serve as more than packaging. It can become a simple, fashionable shoulder bag. Its strength, water resistance and comfortable handling encourage repeated use. Printing your company logo or advertising on the bag creates continued brand exposure from a modest initial investment.



Material and use

The original catalogue links restrictions on plastic bags to environmental protection. Repeated use of nonwoven bags can reduce pressure from discarded bags. An environmental message can also support a company’s image and connection with customers, creating value beyond the bag itself.

04

Products & construction

Formats, handles, printing and closures



Carry bags

VNJAR

Product

Nonwoven bag

Material

Virgin nonwoven fabric

Handles

Carry handles

Construction

Sewn, heat-sealed or cross-stitch reinforced



VNJAR

Choose the seam for the bag and its use



Heat sealing

A neat, heat-formed seam. Source reference load: approx. 5 kg.



Sewn seams

Machine-sewn construction. Source reference load: approx. 8 kg.

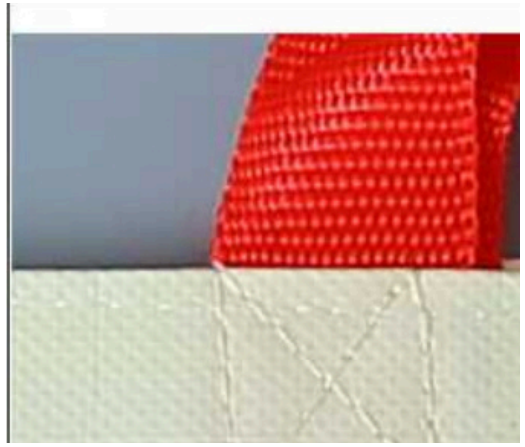

Cross-stitch reinforcement

Cross stitching reinforces the seam. Source reference load: approx. 10 kg.



Heat embossing

Heat-formed embossing creates a neat edge and decorative finish.



Wide handles

Wider carrying straps, with the width selected for the bag and its intended use.



Print detail

Patterns, logos and lettering can be discussed as part of the print design.



Snap buttons

A snap button fastens the opening, helping keep contents in place with a neat finish.



Adhesive strips

An adhesive strip brings the opening together for a closely sealed finish.

VNJAR





Hook-and-loop closure

A hook-and-loop strip offers a resealable opening for repeated use.

Bag formats



Flat opening

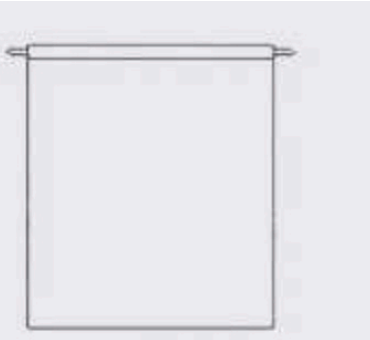

Drawstring

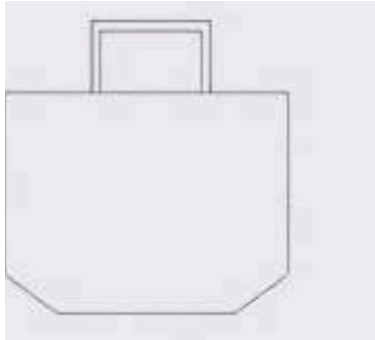

T-style

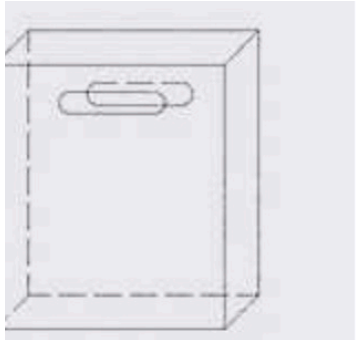

Gusseted

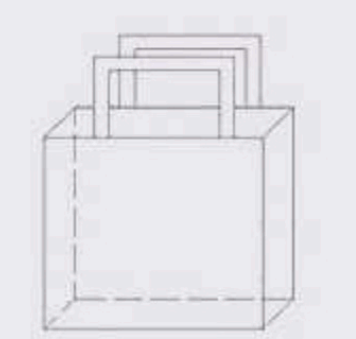

Portrait

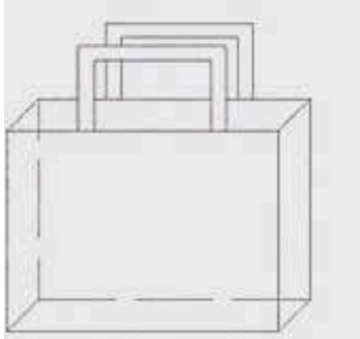

Landscape

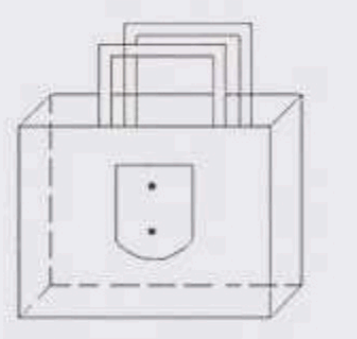

Foldable

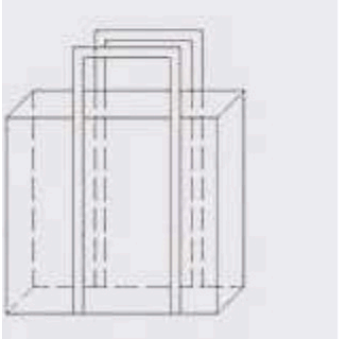

Reinforced

VNJAR

A bag for every application.







Since its establishment, Anhui Weinuojia Packaging has followed the principles of quality first and honest business. The company has built relationships with a range of businesses and earned customer recognition. Its nonwoven packaging serves applications including food, tobacco and beverages; fashion and footwear; jewellery and accessories; and corporate promotion.

05

Applications







Packaging references for different uses

Takeaway food







Source catalogue examples · Format and print references

Tea & drinks







Source catalogue examples · Format and print references

Fashion & footwear







Source catalogue examples · Format and print references

Bakery







Source catalogue examples · Format and print references

Wine & beverages







Source catalogue examples · Format and print references

Promotional gifts







Source catalogue examples · Format and print references

Food gifts









Source catalogue examples · Format and print references

Developing products and service

Through years of work in the domestic market, Anhui Weinuojia Packaging has introduced equipment and technologies, consolidated its resources and expanded and modernised its carry-bag production. We will continue to progress, keep pace with changing needs and develop new products.

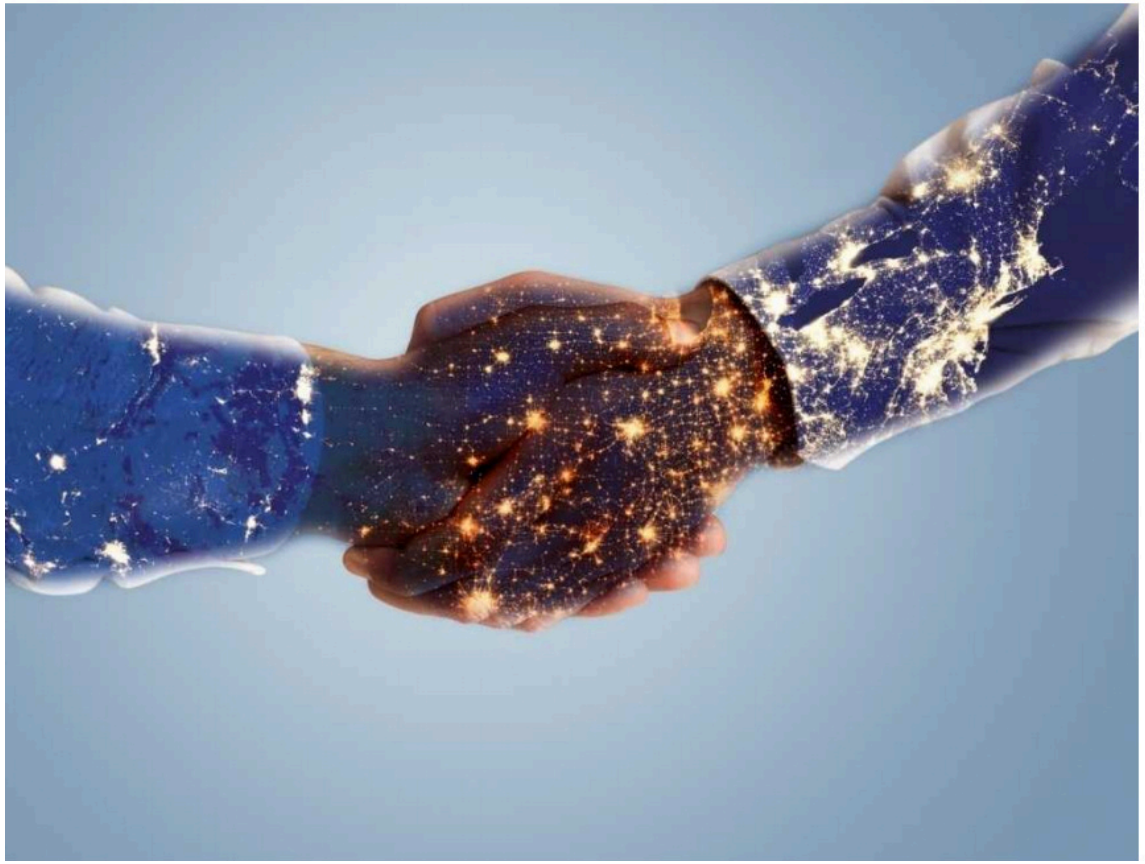

VNJAR

Thank you.

Anhui Weinuojia
New Material Packaging Co., Ltd.

vnjar.com

2026