Food & beverage packaging

VNJAR · BOTTLE & JAR COLLECTION

Clear packaging.
Made for your brand.

Plastic bottles & jars · Custom packaging



Anqing Vnjar Eco Technology Co., Ltd.

sales@vnjar.com

Company overview

VNJAR · BOTTLE & JAR COLLECTION

VNJAR focuses on food and beverage packaging, bringing together research and development, production, sales and customization. We consider materials, structure, finishing and intended use together, so packaging works well and suits your brand.

Quality drives our growth, supported by service. Guided by market needs and technical expertise, we provide bottle and jar customization for food and beverage businesses.

Production facilities

VNJAR





Our values

VNJAR · BOTTLE & JAR COLLECTION

Integrity · Responsibility · Innovation · Shared success

Make exceptional products. Build a lasting brand.

Customers first. Service with care.

Positioning · Vision · Spirit · Core values

Quality control

VNJAR · BOTTLE & JAR COLLECTION

- Material inspection and control
- Production process control
- Production environment control
- Quality management system





Our team

VNJAR · BOTTLE & JAR COLLECTION









Brand references

VNJAR · BOTTLE & JAR COLLECTION



Patent references

VNJAR · BOTTLE & JAR COLLECTION

Invention patents

Original certificates

The original certificates are reproduced unchanged. Contact us to verify specific details.



Product collection

VNJAR · BOTTLE & JAR COLLECTION

Bottles. Jars.
Made for your product.

Plastic bottles & jars · Custom packaging

Anqing Vnjar Eco Technology Co., Ltd.



sales@vnjar.com

28 mm · Cold brew bottle

VNJAR · BOTTLE & JAR COLLECTION

Catalogue capacity

360 ml

Bottle weight: 23 / 28 g Packing: 150 / 200 pcs

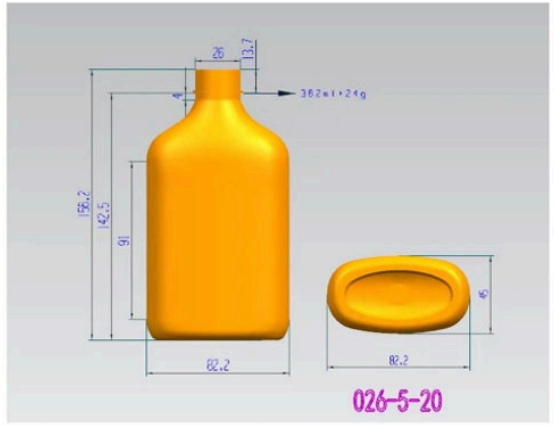



Catalogue specifications; original drawings retained. Confirm the drawing before selection.

28 mm · Teardrop bottle

VNJAR · BOTTLE & JAR COLLECTION

Catalogue capacity

350 ml

Bottle weight: 23 / 28 g





Catalogue specifications; original drawings retained. Confirm the drawing before selection.

38 mm · Cylindrical bottle

VNJAR · BOTTLE & JAR COLLECTION

Catalogue capacity

320 ml

Bottle weight: 30 / 35 / 39 g Packing: 200 pcs





Aluminium / tamper-evident / handle caps

Catalogue specifications; original drawings retained. Confirm the drawing before selection.

38 mm · Round shoulder bottle

VNJAR · BOTTLE & JAR COLLECTION

Catalogue capacity

brimful 400 ml

Bottle weight: 30 / 35 / 39 g Packing: 200 pcs





Aluminium / tamper-evident / handle caps

Catalogue specifications; original drawings retained. Confirm the drawing before selection.

38 mm · Cylindrical bottle

VNJAR · BOTTLE & JAR COLLECTION

Catalogue capacity

410 ml

Bottle weight: 30 / 35 / 39 g Packing: 200 pcs

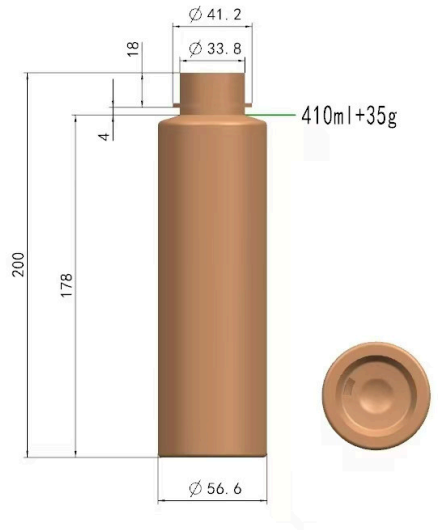



Aluminium / tamper-evident / handle caps

Catalogue specifications; original drawings retained. Confirm the drawing before selection.

38 mm · Cylindrical bottle

VNJAR · BOTTLE & JAR COLLECTION

Catalogue capacity

brimful 483 ml

Bottle weight: 30 / 35 / 39 g Packing: 200 pcs





Aluminium / tamper-evident / handle caps

Catalogue specifications; original drawings retained. Confirm the drawing before selection.

38 mm · Cylindrical bottle

VNJAR · BOTTLE & JAR COLLECTION

Catalogue capacity

brimful 370 ml

Bottle weight: 30 / 35 / 39 g Packing: 200 pcs





Aluminium / tamper-evident / handle caps

Catalogue specifications; original drawings retained. Confirm the drawing before selection.

38 mm · Sloped shoulder bottle

VNJAR · BOTTLE & JAR COLLECTION

Catalogue capacity

335 ml

Bottle weight: 30 / 35 / 39 g





Aluminium / tamper-evident / handle caps

Catalogue specifications; original drawings retained. Confirm the drawing before selection.

38 mm · Slim bottle

VNJAR · BOTTLE & JAR COLLECTION

Catalogue capacity

brimful 528 ml

Bottle weight: 30 / 35 / 39 / 40 / 48 g Packing: 200 pcs

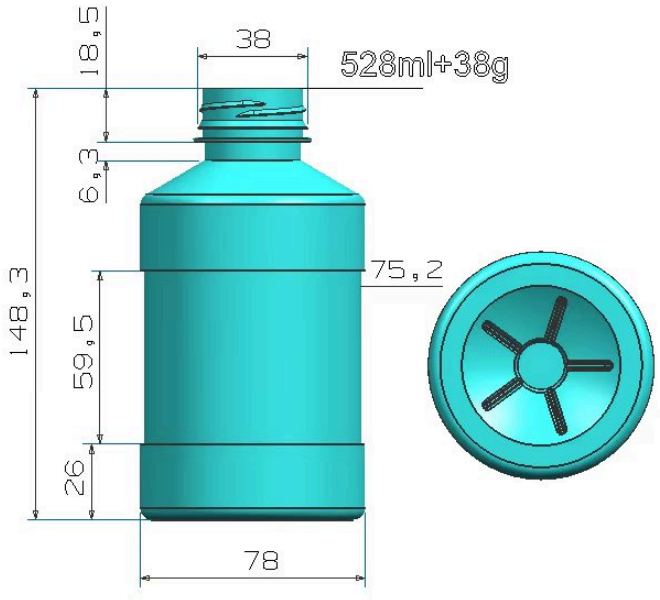



Aluminium / tamper-evident / handle caps

Catalogue specifications; original drawings retained. Confirm the drawing before selection.

38 mm · Flat square bottle

VNJAR · BOTTLE & JAR COLLECTION

Catalogue capacity

375 ml

Bottle weight: 30 / 35 / 39 / 40 / 42 g Packing: 200 pcs





Aluminium / tamper-evident / handle caps

Catalogue specifications; original drawings retained. Confirm the drawing before selection.

38 mm · Round shoulder bottle

VNJAR · BOTTLE & JAR COLLECTION

Catalogue capacity

brimful 340 ml

Bottle weight: 30 / 35 / 39 g





Aluminium / tamper-evident / handle caps

Catalogue specifications; original drawings retained. Confirm the drawing before selection.

38 mm · Cold brew bottle

VNJAR · BOTTLE & JAR COLLECTION

Catalogue capacity

750 ml

Bottle weight: 30 / 35 / 39 / 40 / 48 g Packing: 100 pcs

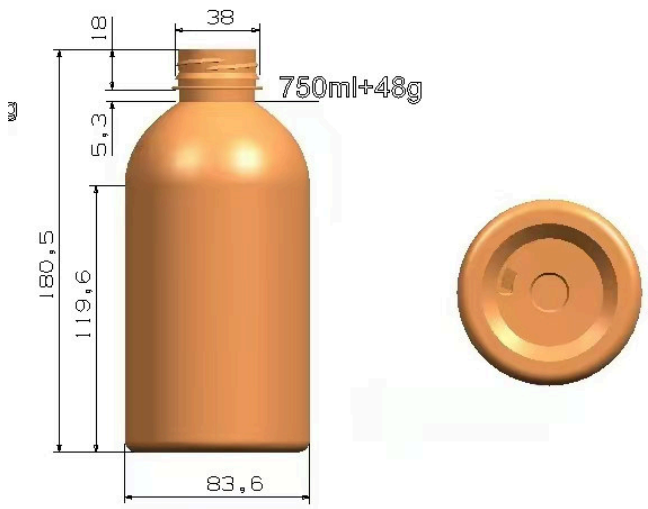



Aluminium / tamper-evident / handle caps

Catalogue specifications; original drawings retained. Confirm the drawing before selection.

38 mm · Flat square bottle

VNJAR · BOTTLE & JAR COLLECTION

Catalogue capacity

320 / 420 / 520 ml

Bottle weight: 30 / 35 / 39 / 40 / 48 g Packing: 200 pcs

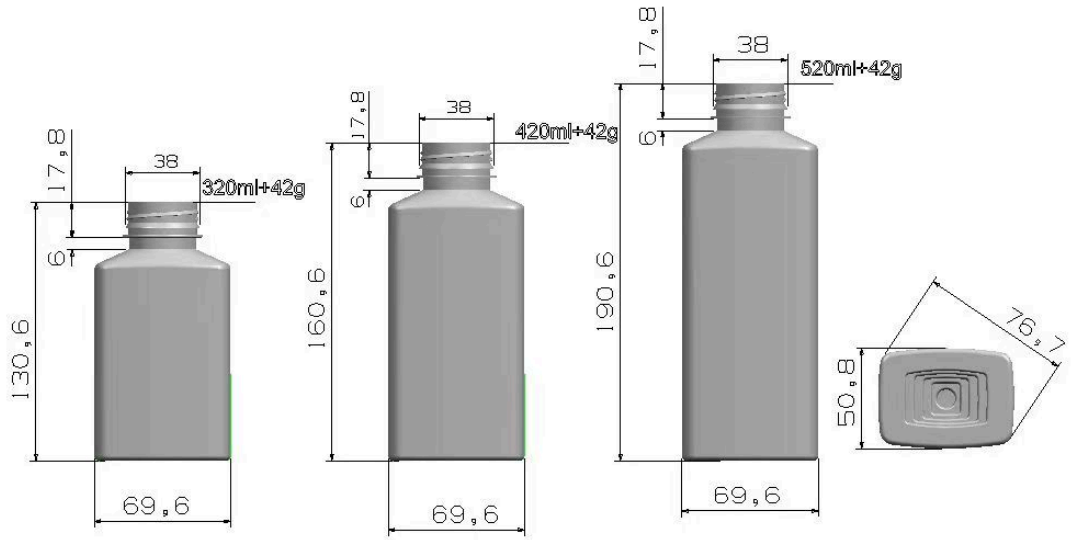



Aluminium / tamper-evident / handle caps

Catalogue specifications; original drawings retained. Confirm the drawing before selection.

38 mm · Flat square bottle

VNJAR · BOTTLE & JAR COLLECTION

Catalogue capacity

550 ml

Bottle weight: 30 / 35 / 39 / 40 / 48 g Packing: 200 pcs





Aluminium / tamper-evident / handle caps

Catalogue specifications; original drawings retained. Confirm the drawing before selection.

38 mm · Tall square bottle

VNJAR · BOTTLE & JAR COLLECTION

Catalogue capacity

350 / 350 / 400 ml

Bottle weight: 30 / 35 / 39 / 40 g Packing: 200 pcs

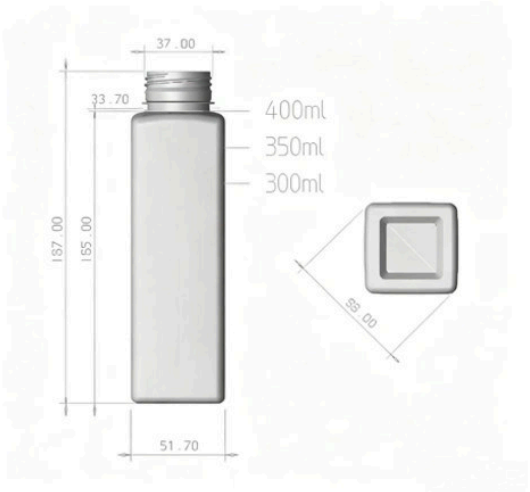



Aluminium / tamper-evident / handle caps

Catalogue specifications; original drawings retained. Confirm the drawing before selection.

53 mm · Cylindrical bottle

VNJAR · BOTTLE & JAR COLLECTION

Catalogue capacity

560 / 490 / 390 / 310 ml

Bottle weight: 30 / 33 / 35 / 51 g Packing: 200 pcs

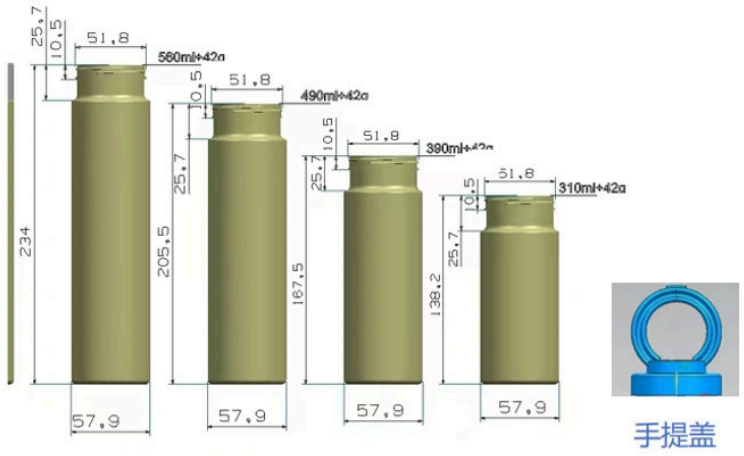



See source catalogue for cap options

Catalogue specifications; original drawings retained. Confirm the drawing before selection.

53 mm · Cylindrical bottle

VNJAR · BOTTLE & JAR COLLECTION

Catalogue capacity

520 ml

Bottle weight: 30 / 33 / 35 g Packing: 200 pcs





See source catalogue for cap options

Catalogue specifications; original drawings retained. Confirm the drawing before selection.

53 mm · Cylindrical bottle

VNJAR · BOTTLE & JAR COLLECTION

Catalogue capacity

305 / 350 / 420 ml

Bottle weight: 30 / 33 / 35 g Packing: 200 pcs

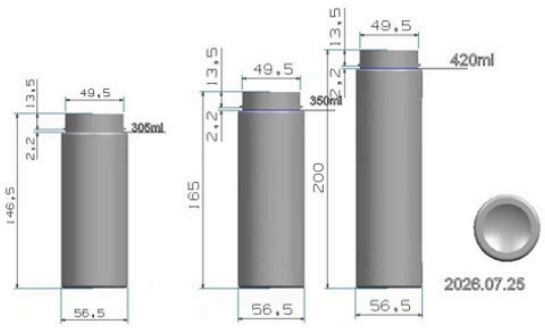



See source catalogue for cap options

Catalogue specifications; original drawings retained. Confirm the drawing before selection.

53 mm · Square bottle

VNJAR · BOTTLE & JAR COLLECTION

Catalogue capacity

450 ml / brimful 420 ml / brimful 330 ml

Bottle weight: 30 / 33 / 35 / 51 g

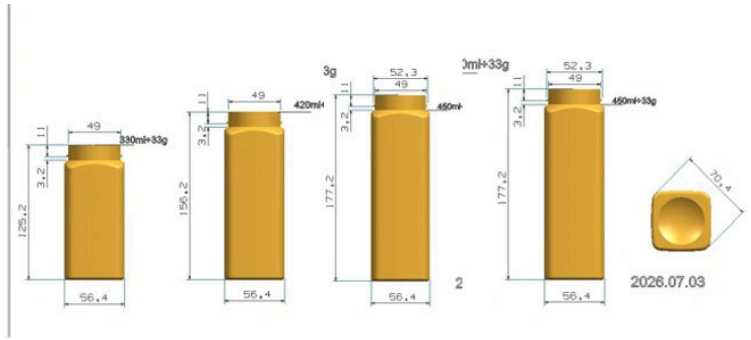



See source catalogue for cap options

Catalogue specifications; original drawings retained. Confirm the drawing before selection.

53 mm · Cylindrical bottle

VNJAR · BOTTLE & JAR COLLECTION

Catalogue capacity

290 ml

Bottle weight: 30 / 33 / 35 g Packing: 200 pcs

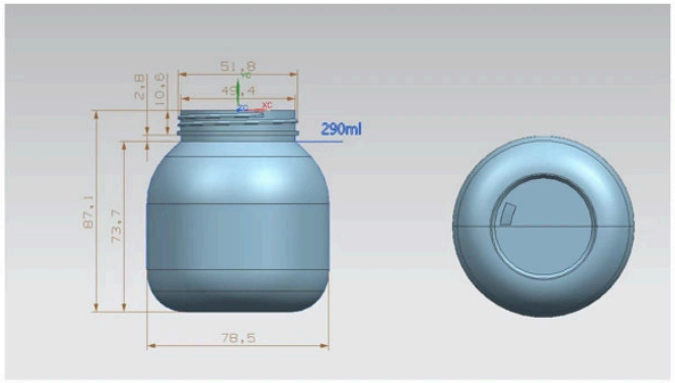



See source catalogue for cap options

Catalogue specifications; original drawings retained. Confirm the drawing before selection.

53 mm · Small tea bottle

VNJAR · BOTTLE & JAR COLLECTION

Catalogue capacity

375 ml

Bottle weight: 30 / 33 / 35 g Packing: 200 pcs

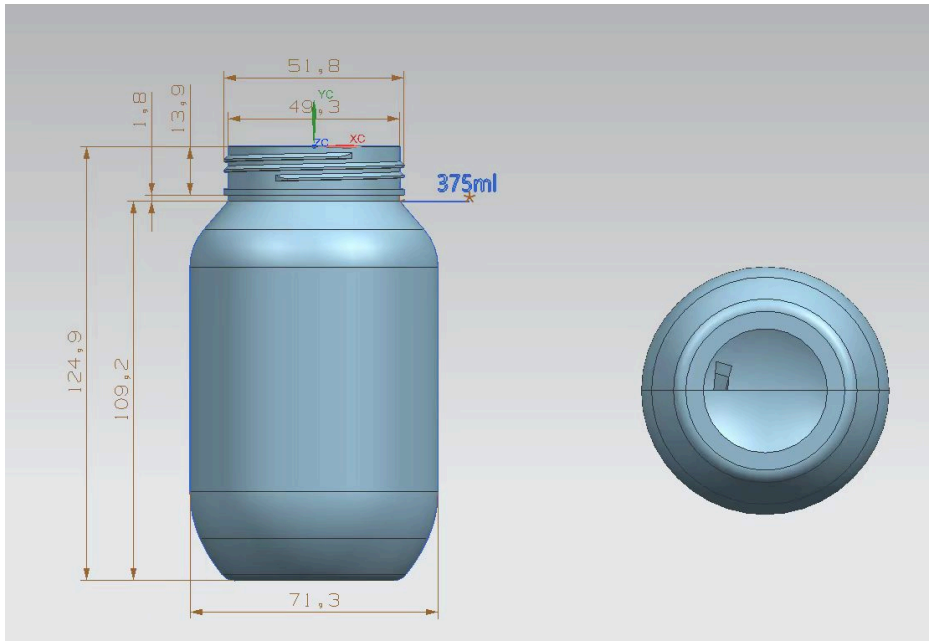



See source catalogue for cap options

Catalogue specifications; original drawings retained. Confirm the drawing before selection.

53 mm · Large tea bottle

VNJAR · BOTTLE & JAR COLLECTION

Catalogue capacity

505 ml

Bottle weight: 30 / 33 / 35 g Packing: 200 pcs

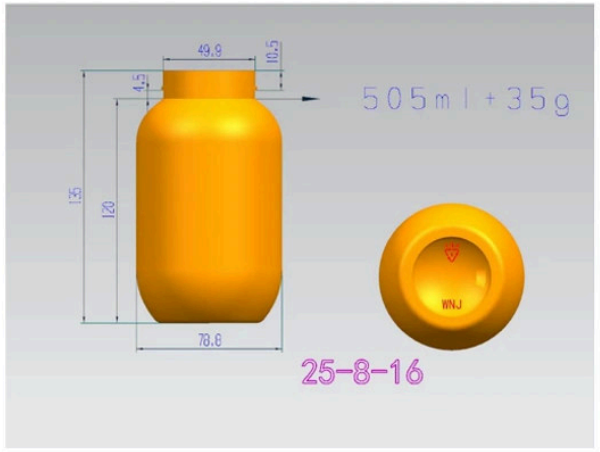



See source catalogue for cap options

Catalogue specifications; original drawings retained. Confirm the drawing before selection.

53 mm · Round bottle

VNJAR · BOTTLE & JAR COLLECTION

Catalogue capacity

390 ml

Bottle weight: 30 / 33 / 35 g Packing: 200 pcs

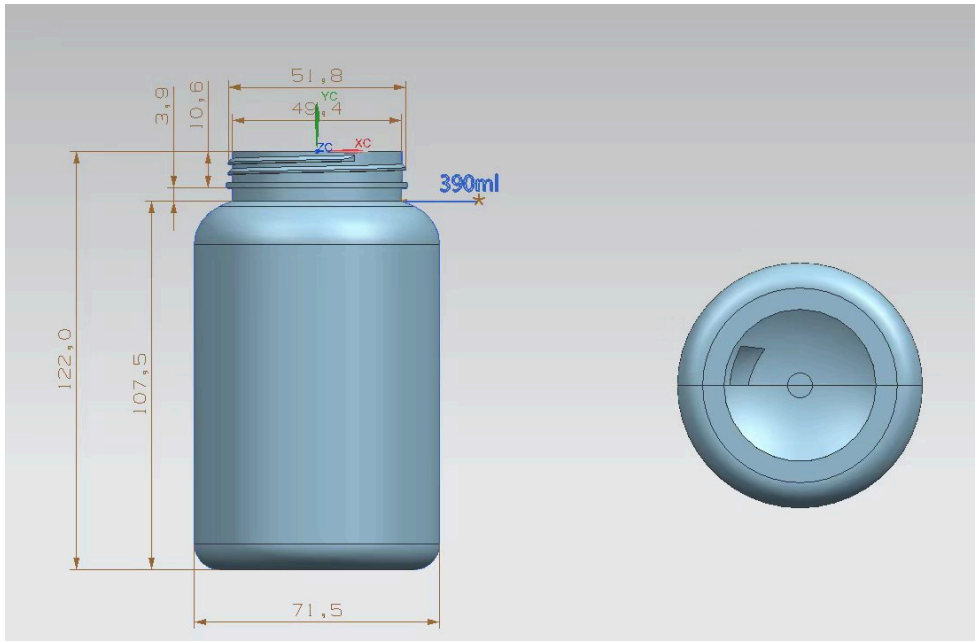



See source catalogue for cap options

Catalogue specifications; original drawings retained. Confirm the drawing before selection.

53 mm · Round bottle

VNJAR · BOTTLE & JAR COLLECTION

Catalogue capacity

608 ml

Bottle weight: 30 / 33 / 35 g Packing: 200 pcs





See source catalogue for cap options

Catalogue specifications; original drawings retained. Confirm the drawing before selection.

53 mm · Round bottle

VNJAR · BOTTLE & JAR COLLECTION

Catalogue capacity

850 ml

Bottle weight: 33 / 35 / 51 / 56 g Packing: 50 pcs

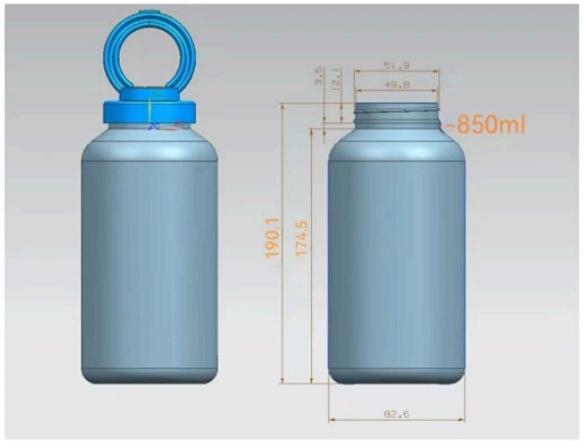



See source catalogue for cap options

Catalogue specifications; original drawings retained. Confirm the drawing before selection.

53 mm · Round bottle

VNJAR · BOTTLE & JAR COLLECTION

Catalogue capacity

675 ml

Bottle weight: 30 / 33 / 35 g Packing: 100 pcs

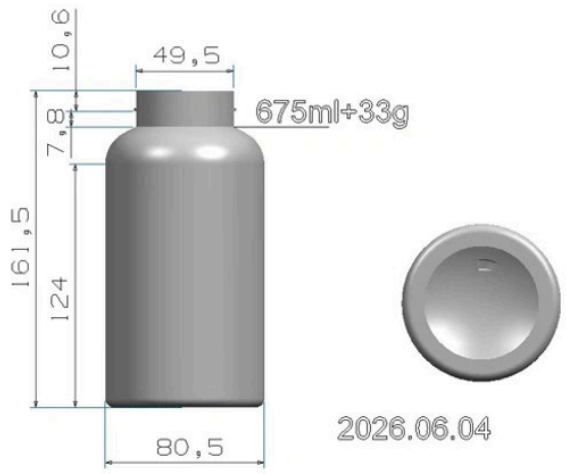



See source catalogue for cap options

Catalogue specifications; original drawings retained. Confirm the drawing before selection.

53 mm · Round bottle

VNJAR · BOTTLE & JAR COLLECTION

Catalogue capacity

520 ml

Bottle weight: 30 / 33 / 35 g Packing: 200 pcs

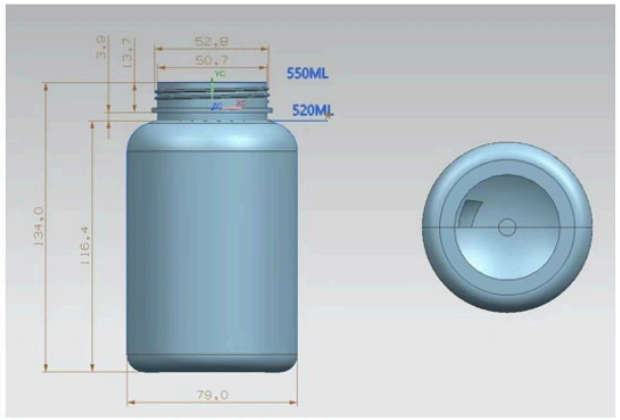



See source catalogue for cap options

Catalogue specifications; original drawings retained. Confirm the drawing before selection.

53 mm · Cylindrical bottle

VNJAR · BOTTLE & JAR COLLECTION

Catalogue capacity

1020 ml

Bottle weight: 51 / 56 g Packing: 100 pcs

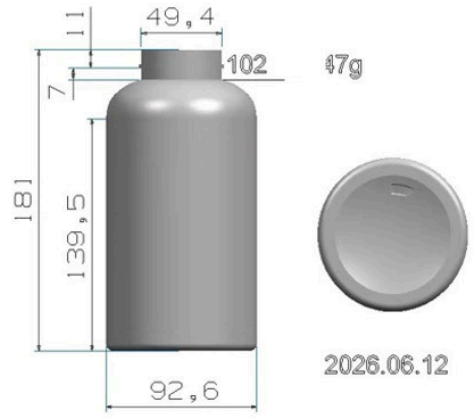



See source catalogue for cap options

Catalogue specifications; original drawings retained. Confirm the drawing before selection.

54 mm · Round bottle

VNJAR · BOTTLE & JAR COLLECTION

Catalogue capacity

brimful 460 ml

Bottle weight: 25 / 30 g Packing: 200 pcs

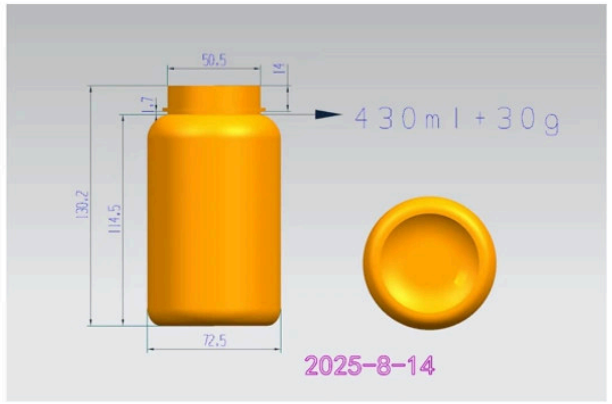



See source catalogue for cap options

Catalogue specifications; original drawings retained. Confirm the drawing before selection.

54 mm · Round bottle

VNJAR · BOTTLE & JAR COLLECTION

Catalogue capacity

330 ml

Bottle weight: 25 / 30 g Packing: 200 pcs

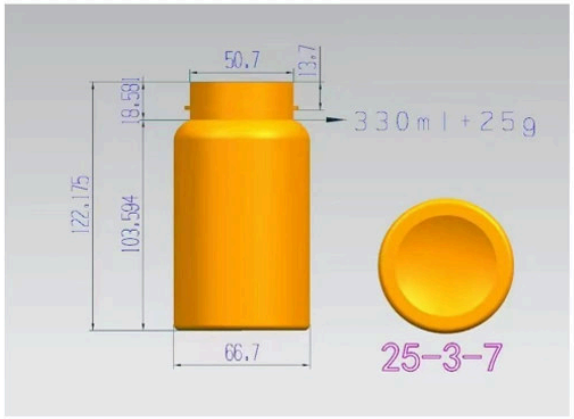



See source catalogue for cap options

Catalogue specifications; original drawings retained. Confirm the drawing before selection.

54 mm · Slim bottle

VNJAR · BOTTLE & JAR COLLECTION

Catalogue capacity

492 ml

Bottle weight: 25 / 30 g Packing: 200 pcs

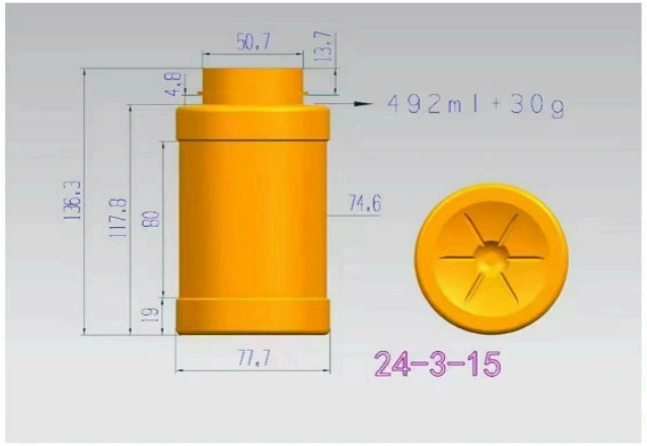





See source catalogue for cap options

Catalogue specifications; original drawings retained. Confirm the drawing before selection.

54 mm · Slim bottle

VNJAR · BOTTLE & JAR COLLECTION

Catalogue capacity

1000 ml

Bottle weight: 45 g Packing: 200 pcs

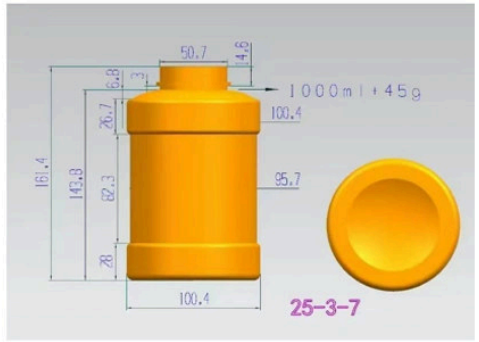





See source catalogue for cap options

Catalogue specifications; original drawings retained. Confirm the drawing before selection.

54 mm · Grip bottle

VNJAR · BOTTLE & JAR COLLECTION

Catalogue capacity

1000 ml

Bottle weight: 45 g Packing: 200 pcs







See source catalogue for cap options

Catalogue specifications; original drawings retained. Confirm the drawing before selection.

68 mm · Jar

VNJAR · BOTTLE & JAR COLLECTION

Catalogue capacity

brimful 500 ml

Bottle weight: 35 g

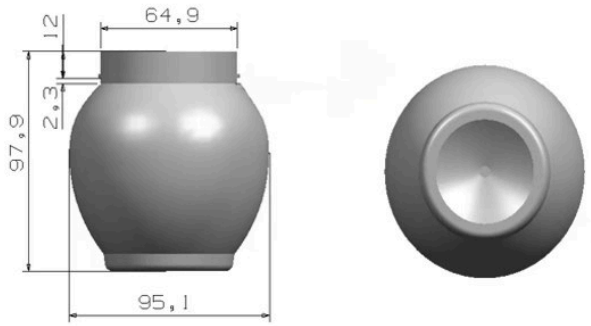



See source catalogue for cap options

Catalogue specifications; original drawings retained. Confirm the drawing before selection.

55 mm · Easy-open can

VNJAR · BOTTLE & JAR COLLECTION

Catalogue capacity

250 ml

Bottle weight: 26 g Packing: 200 pcs







See source catalogue for ends and openings

Catalogue specifications; original drawings retained. Confirm the drawing before selection.

55 mm · Easy-open can

VNJAR · BOTTLE & JAR COLLECTION

Catalogue capacity

330 ml

Bottle weight: 26 g Packing: 200 pcs





See source catalogue for ends and openings

Catalogue specifications; original drawings retained. Confirm the drawing before selection.

55 mm · Easy-open can

VNJAR · BOTTLE & JAR COLLECTION

Catalogue capacity

330 ml

Bottle weight: 26 g Packing: 300 pcs

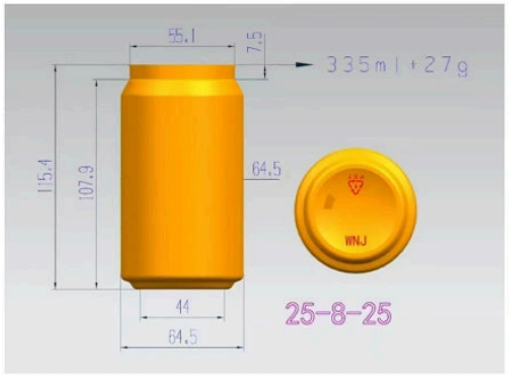





See source catalogue for ends and openings

Catalogue specifications; original drawings retained. Confirm the drawing before selection.

55 mm · Easy-open can

VNJAR · BOTTLE & JAR COLLECTION

Catalogue capacity

500 ml

Bottle weight: 26 / 32 g Packing: 200 pcs





See source catalogue for ends and openings

Catalogue specifications; original drawings retained. Confirm the drawing before selection.

55 mm · Easy-open can

VNJAR · BOTTLE & JAR COLLECTION

Catalogue capacity

600 ml

Bottle weight: 26 / 32 g Packing: 200 pcs





See source catalogue for ends and openings

Catalogue specifications; original drawings retained. Confirm the drawing before selection.

55 mm · Easy-open can

VNJAR · BOTTLE & JAR COLLECTION

Catalogue capacity

600 ml

Bottle weight: 26 / 32 g Packing: 200 pcs





See source catalogue for ends and openings

Catalogue specifications; original drawings retained. Confirm the drawing before selection.

Contact VNJAR

VNJAR · BOTTLE & JAR COLLECTION

Zhang Fuhong

Sales Manager

Anqing Vnjar Eco Technology Co., Ltd.

+86 167 6113 6709

sales@vnjar.com

vnjar.com

